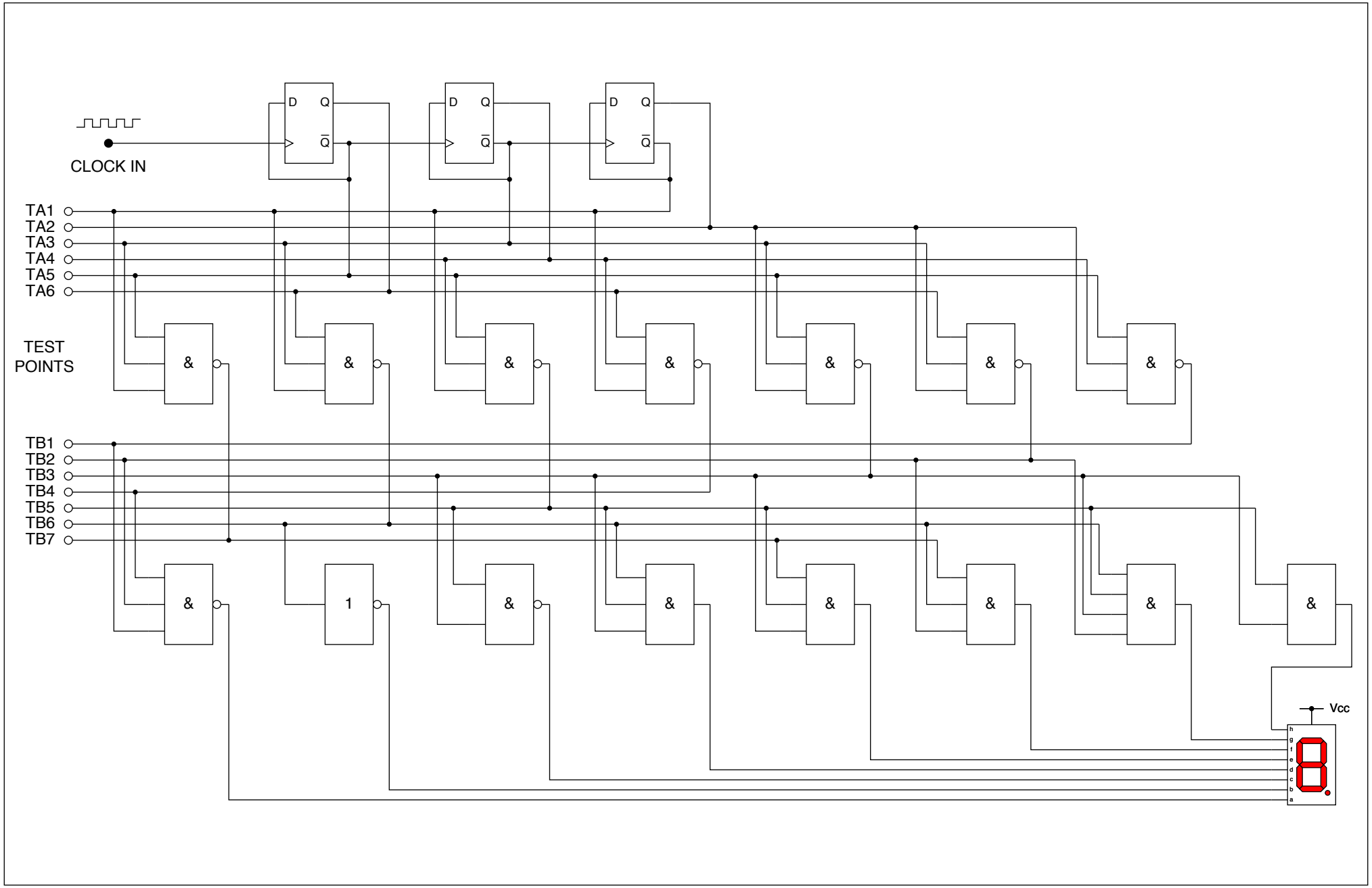
CLOCK IN
D
Q
Q̄
TA1
TA2
TA3
TA4
TA5
TA6
TEST POINTS
TB1
TB2
TB3
TB4
TB5
TB6
TB7
&
1
Vcc
h
g
f
e
d
c
b
a